US007621503B2

(12) **United States Patent**
**Warren et al.**

(10) **Patent No.: US 7,621,503 B2**
(45) **Date of Patent: Nov. 24, 2009**

(54) **MULTIPURPOSE HAMMER**

(75) Inventors: **Jon Warren**, Redding, CA (US); **Allan Jeffers**, Redding, CA (US); **Curtis Lupo**, Redding, CA (US)

(73) Assignee: **Nightshift Group, LLC**, Reno, NV (US)

( * ) Notice: Subject to any disclaimer, the term of this patent is extended or adjusted under 35 U.S.C. 154(b) by 0 days.

(21) Appl. No.: **11/174,773**

(22) Filed: **Jul. 5, 2005**

(65) **Prior Publication Data**

US 2007/0006686 A1 Jan. 11, 2007

(51) **Int. Cl.**
***B66F 15/00*** (2006.01)

(52) **U.S. Cl.** ..... **254/26 R**; 254/21; 254/26 E

(58) **Field of Classification Search** ..... 254/26 R, 254/26 E, 27, 28, 25, 21; 7/164
See application file for complete search history.

(56) **References Cited**

U.S. PATENT DOCUMENTS

| | | | | |
|---|---|---|---|---|
| 5,697 | A | 8/1848 | Powers | |
| 64,662 | A | 5/1867 | Gold | |
| 103,678 | A | 5/1870 | Stockwell | |
| 147,113 | A | 2/1874 | Ellsworth | |
| 333,539 | A * | 1/1886 | Palmer | 254/25 |
| 356,925 | A | 2/1887 | Chamberlin | |
| 493,989 | A | 3/1893 | Duryea | |
| 640,452 | A * | 1/1900 | Date | 254/26 R |
| D34,663 | S | 6/1901 | Yonge | |
| 835,961 | A | 11/1906 | Lee | |
| 875,724 | A | 1/1908 | Mullinix | |
| 888,987 | A * | 5/1908 | Kiehle | 24/695 |
| D45,761 | S | 5/1914 | Miller | |
| 1,409,723 | A * | 3/1922 | Jacob | 33/1 A |
| 1,535,685 | A | 4/1925 | Randell | |
| 1,808,705 | A * | 6/1931 | Owen, Jr. | 33/27.03 |
| 2,420,120 | A | 5/1947 | Bruchsaler | |
| 2,491,129 | A | 12/1949 | Nieuwsma | |
| 2,501,757 | A | 3/1950 | Cagle | |

(Continued)

OTHER PUBLICATIONS

"BioCurve Ergonomic Hammers," Barco catalogue, p. 12.

(Continued)

*Primary Examiner*—Lee D Wilson
(74) *Attorney, Agent, or Firm*—Gordon & Jacobson, PC

(57) **ABSTRACT**

A multipurpose hand tool includes a head, a shank and a handle. The head includes a nail-pulling section, a bridge section and a nail-striking section. The shank extends from the bridge section to the handle. Preferably, the nail-pulling section defines a nail-head-receiving cavity accessible from the rear with nail-body-receiving upper and lower slots leading thereto. In the preferred embodiment, the nail pulling section comprises a segmented top wall, a segmented bottom wall and side walls that define the cavity. The nail pulling section and nail striking section preferably include base surfaces that are substantially flat and aligned in a common plane. The sides of the shank extend downward from the bridge section at a direction substantially orthogonal to this common plane to realize a T-square that can be used for orthogonal line marking. The shank preferably includes other features that are used for measurement and marking. The handle preferably includes an elongate section and a larger end section that extends at an angle relative to the elongate section. One side of the end section has a rib that ergonomically fits into the palm of the user's hand.

**31 Claims, 9 Drawing Sheets**

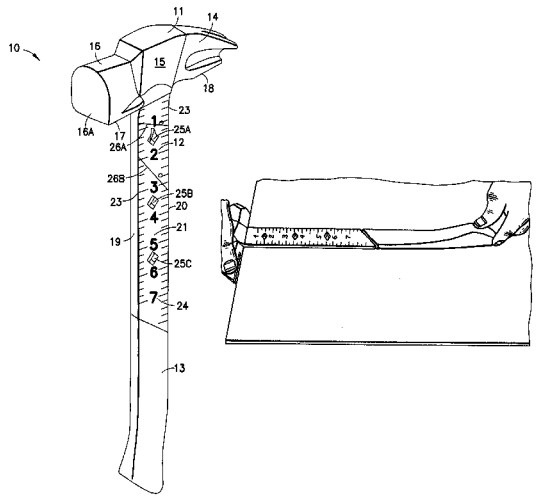

U.S. PATENT DOCUMENTS

| | | | | |
|---|---|---|---|---|
| 2,753,151 | A * | 7/1956 | Svehaug | 254/26 R |
| 3,119,424 | A | 1/1964 | Henry | |
| 4,732,058 | A | 3/1988 | Chung | |
| 5,235,755 | A | 8/1993 | Fowler | |
| D375,033 | S | 10/1996 | Edwards | |
| 5,826,466 | A * | 10/1998 | Weissbach | 7/164 |
| 6,058,539 | A | 5/2000 | Mitford-Taylor | |
| 6,266,834 | B1 | 7/2001 | Walsh et al. | |
| D455,626 | S * | 4/2002 | Chen | D8/78 |
| 6,793,200 | B2 * | 9/2004 | Bystrom | 254/26 R |
| 2002/0088130 | A1 | 7/2002 | Szumer | |

OTHER PUBLICATIONS

"18 oz. Douglas Finish Hammer with 14-inch Handle," Duluth Trading website at http://www.duluthtrading.com/items/95646.asp.
"Death Stick 21 oz. Ax Handle Hammer," available from Toolmart website at http://www.toolmarts.com/don21a.html.

* cited by examiner

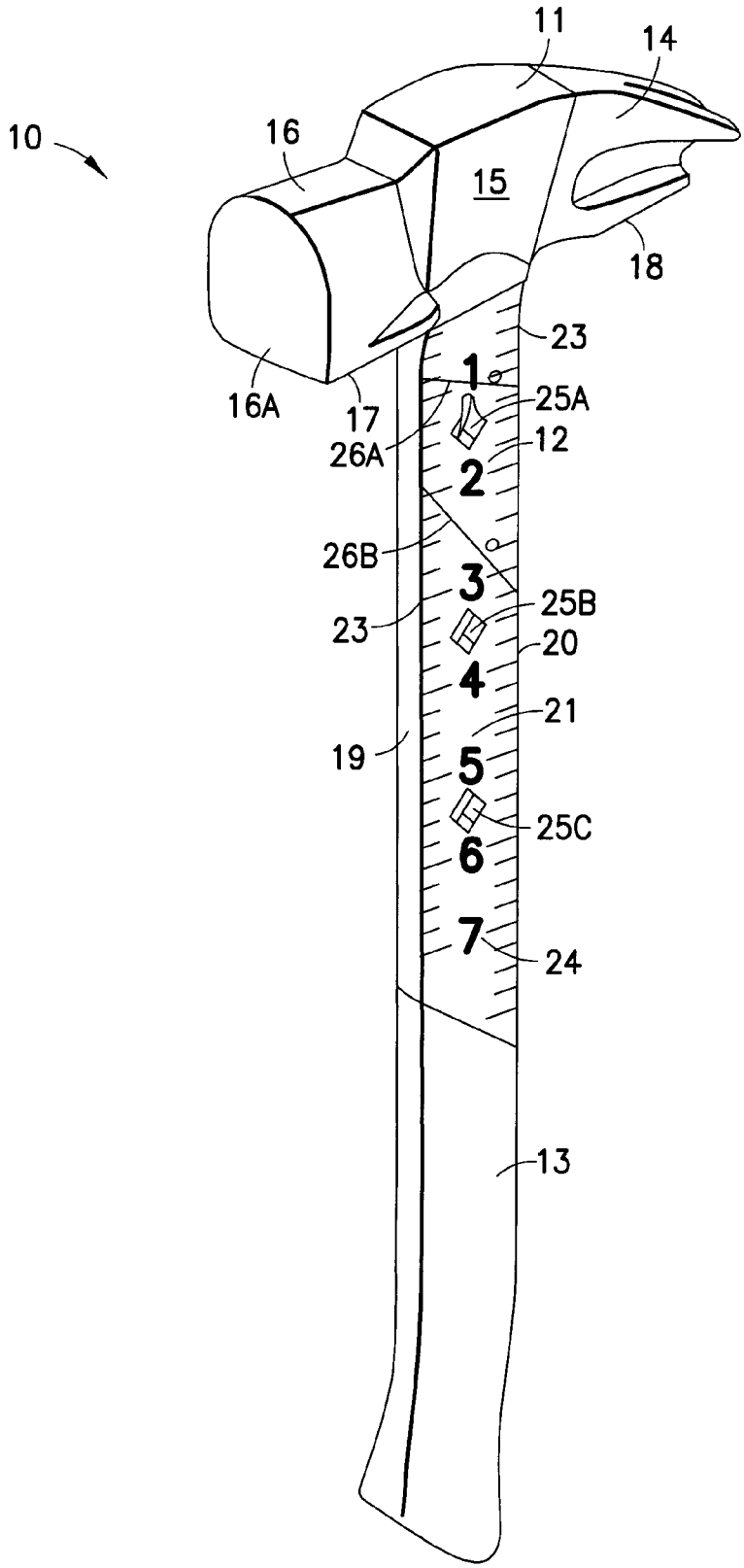
10
11
14
16
15
18
23
1
25A
16A
17
26A
12
2
26B
3
25B
23
20
4
21
19
5
25C
6
7
24
13

FIG. 1

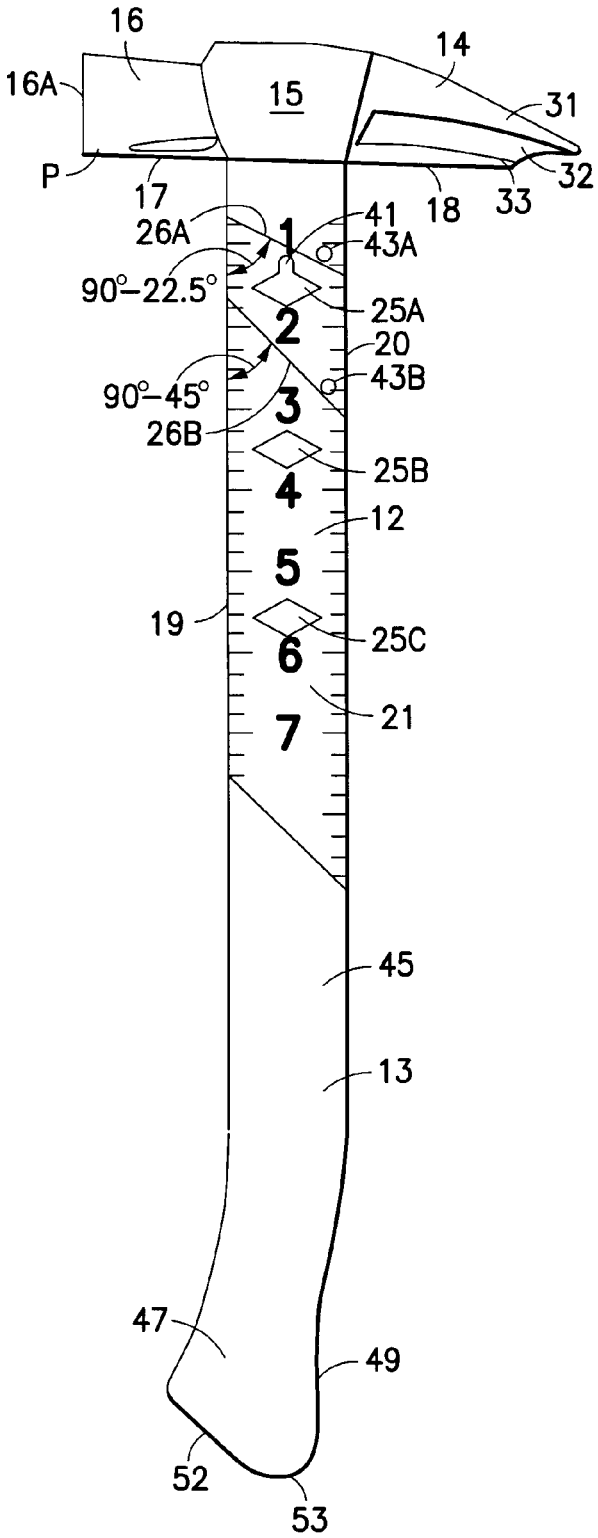


FIG.2

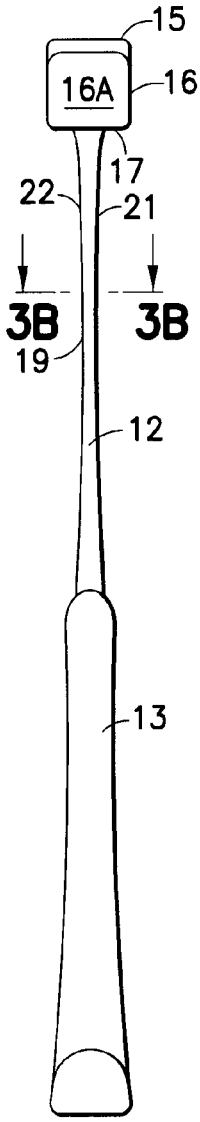


FIG.3A

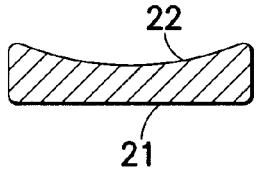


FIG.3B

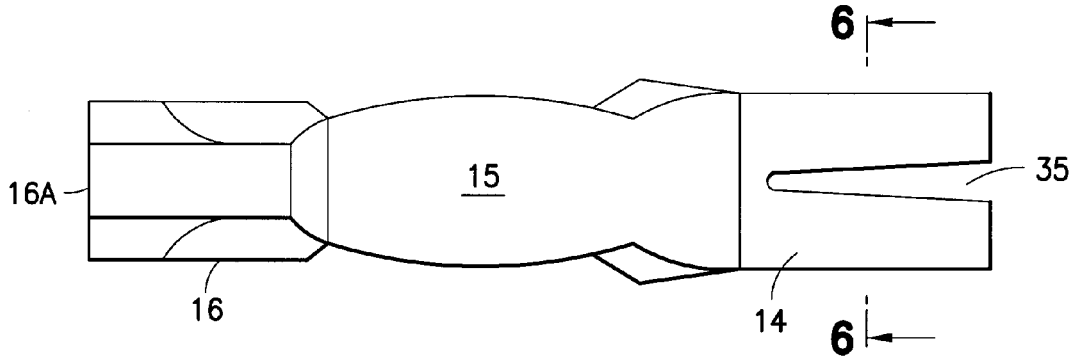


FIG.4

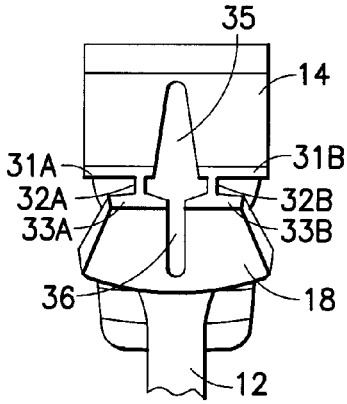


FIG.5

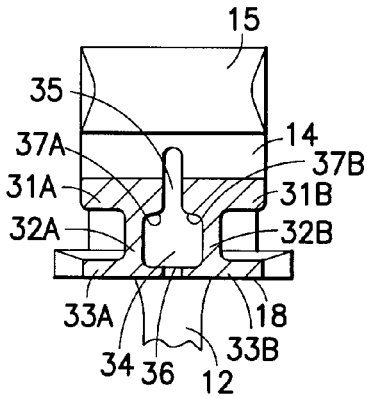


FIG.6

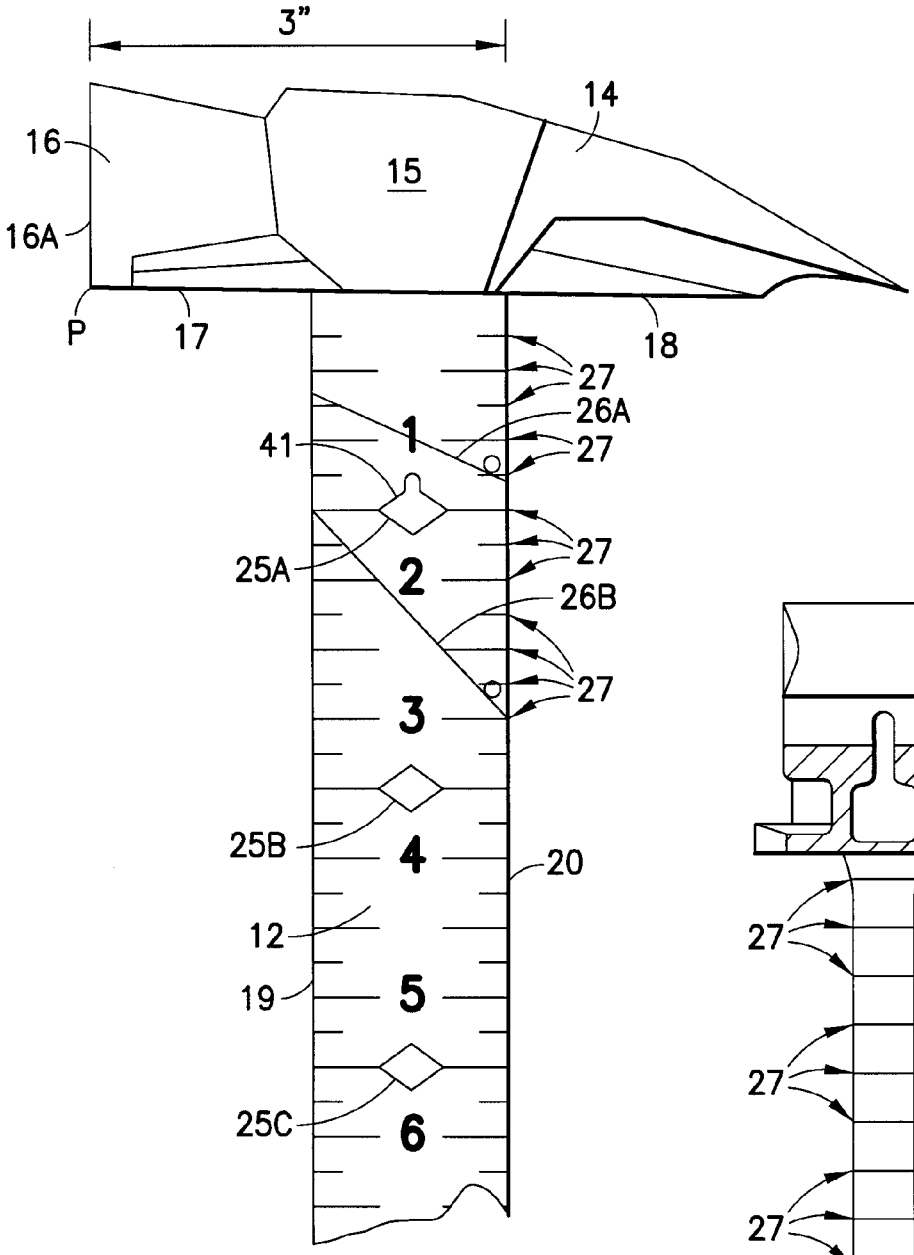
3"
14
16
15
16A
P
17
18
27
26A
41
1
27
27
25A
2
26B
27
3
25B
4
20
12
19
5
25C
6

FIG.7A

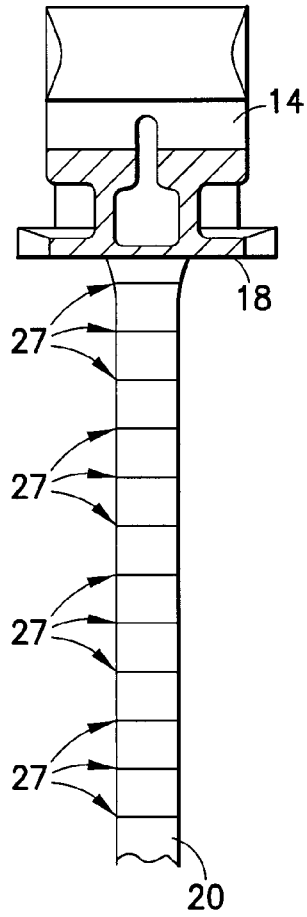
14
18
27
27
27
27
20

FIG.7B

FIG. 7C

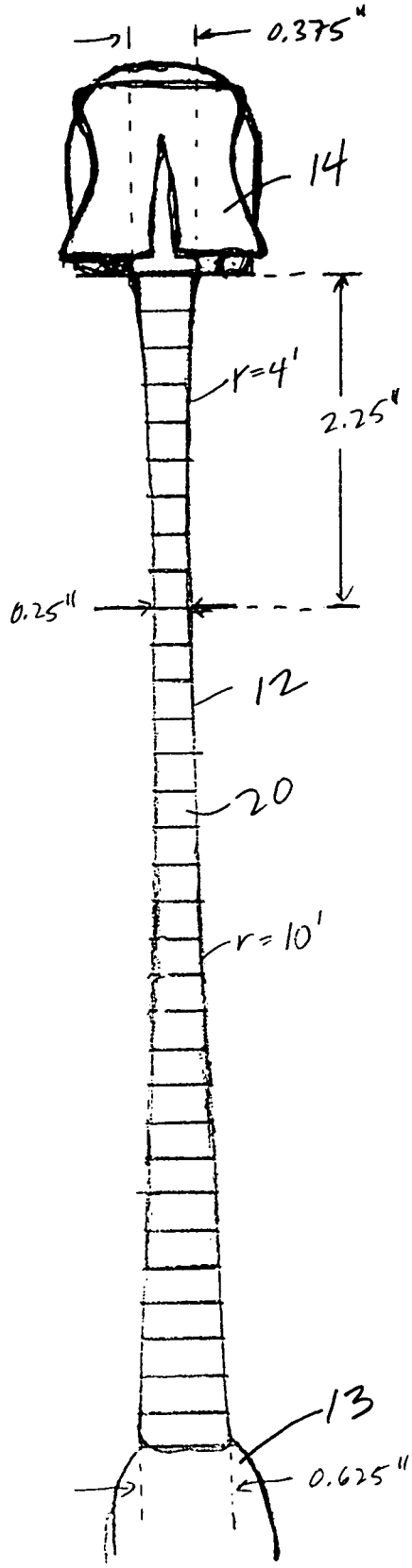

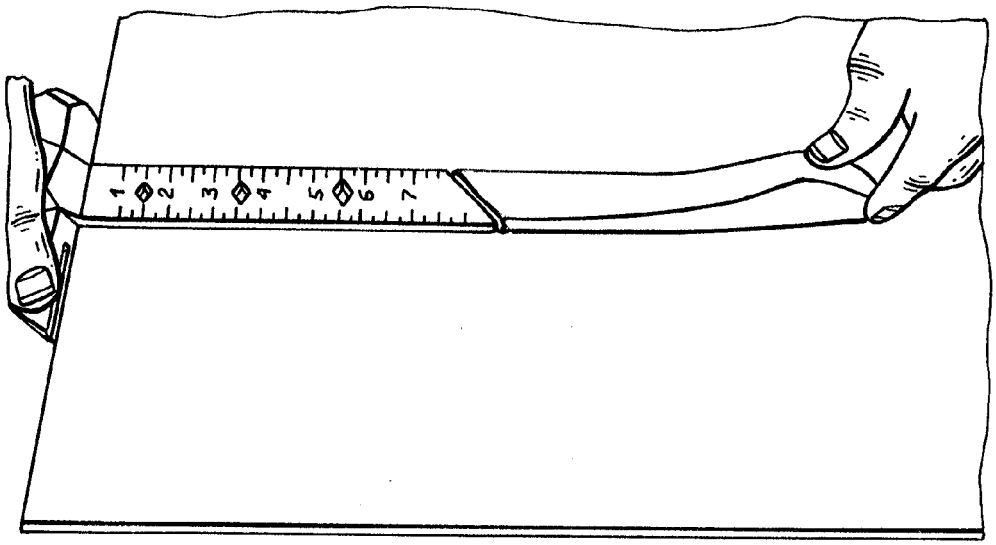


FIG.8

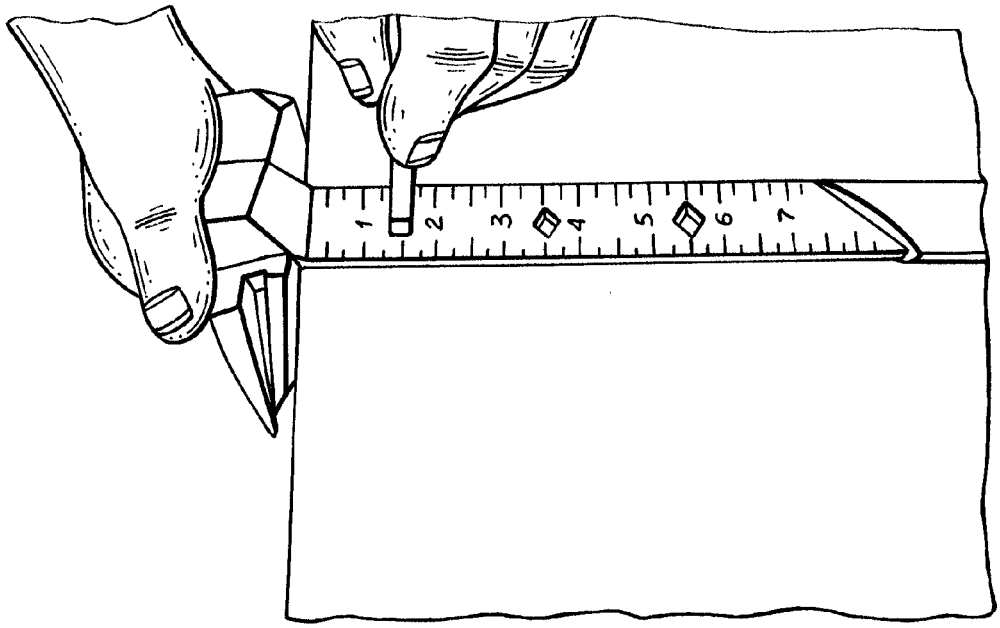


FIG.9

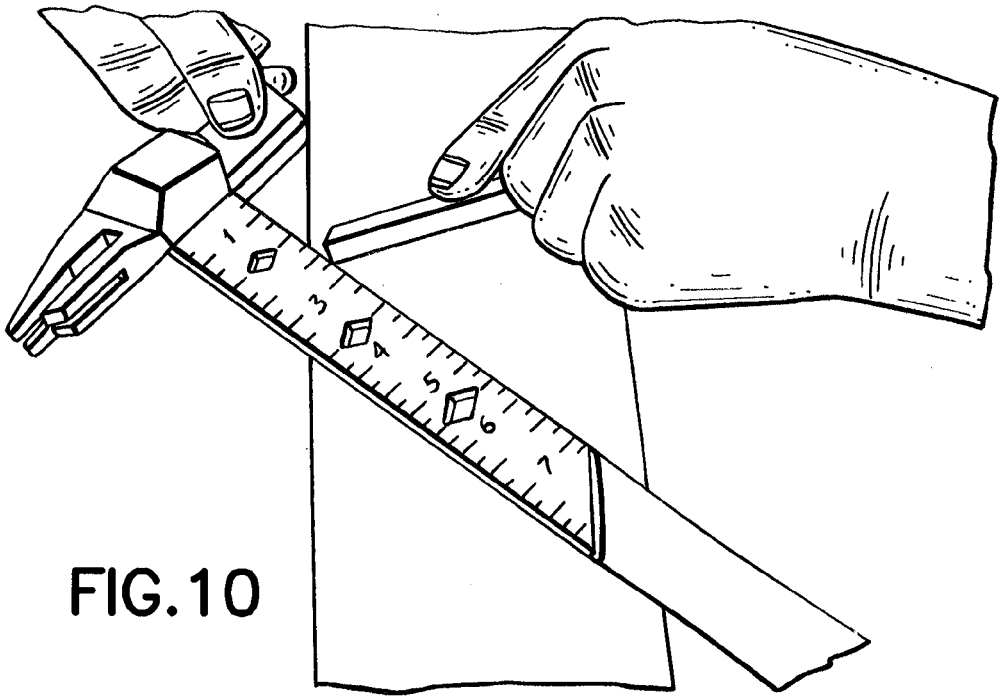


FIG. 10

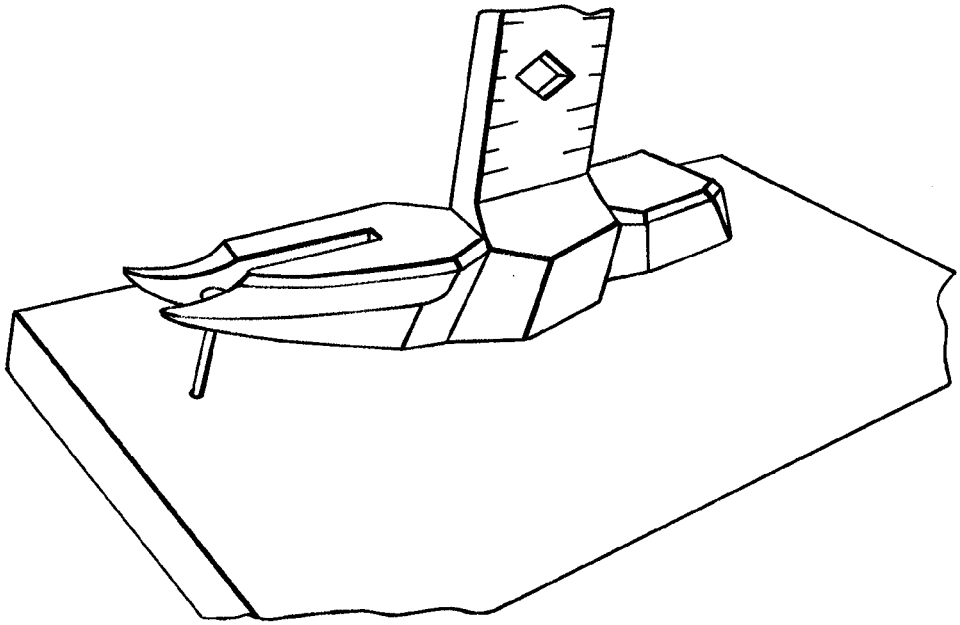

FIG. 11

FIG. 12

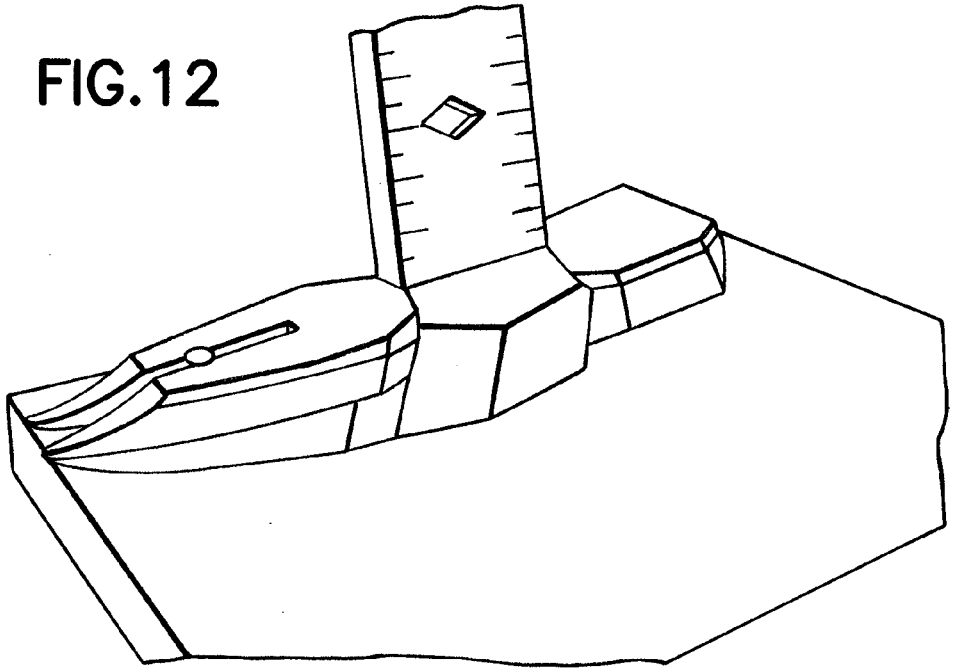

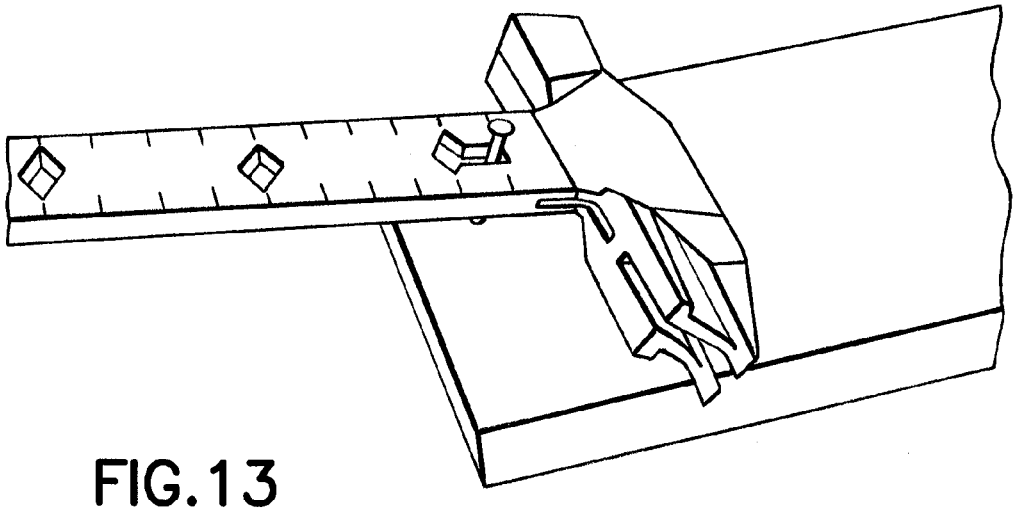

FIG. 13

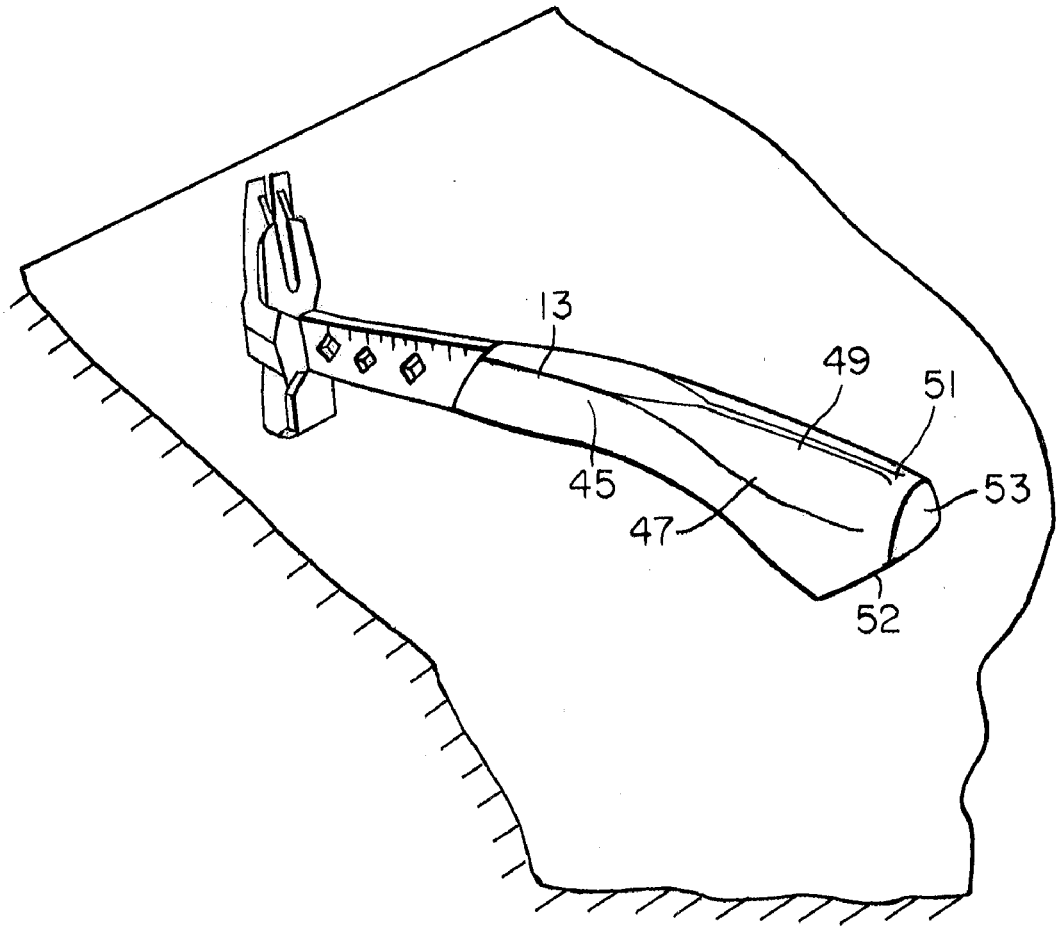


FIG. 14

# MULTIPURPOSE HAMMER

## BACKGROUND OF THE INVENTION

1. Field of the Invention

This invention relates broadly to hand tools used for construction. More particularly, this invention relates to multipurpose hand tools such as a hammer for nailing, nail pulling and measuring and marking objects such as floor joists, studs, ceiling joists, rafters, framing materials, subflooring, sheathing boards, dry wall, etc.

2. State of the Art

Multipurpose hammers that can be used to strike and pull nails as well as perform common measurements are known in the art. For example, U.S. Pat. No. 4,732,058 demarks a hammer with a neck member that includes an 8 inch measuring scale along one edge with a similar scale in centimeters along an opposite edge. However, it is difficult to accurately measuring distance with this hammer because the user must locate and maintain the top of the hammer at the desired origin of the measurement. This is cumbersome and prone to error.

Moreover, such multipurpose hammers do not aid the user in performing other common measurement and marking operations, including orthogonal line marking (which is typically performed in conjunction with a T-square), parallel line and/or angled line marking operations relative to the edge of a board (which are typically performed in conjunction with a tape measure and straight edge or snap line), etc. Thus, in order to carry out these common measurement and marking operations, one must carry and manipulate a large number of tools, which is burdensome in both energy and time for the user.

## SUMMARY OF THE INVENTION

It is therefore an object of the invention to provide a multipurpose hammer that effectively and accurately measures distance.

It is another object of the invention to provide a multipurpose hammer that aids users in performing common measurement and marking operations, including orthogonal line marking, parallel line marking, angled line marking, etc.

It is a further object of the invention to provide a multipurpose hammer with a handle that is ergonomically designed to fit within the palm of the user's hand.

It is also an object of the invention to provide a multipurpose hammer with improved leverage in pulling nails.

In accord with these objects, which will be discussed in detail below, a multipurpose hammer includes a head, a shank and a handle. The head includes a nail-pulling section, a bridge section and a nail-striking section. The shank extends from the bridge section to the handle. Preferably, the nail-pulling section defines a cavity accessible from the rear with an upper and lower slot leading thereto, wherein the cavity is adapted to receive a nail head therein with the upper and lower slots each adapted to receive an elongate nail body therein. In the preferred embodiment, the nail pulling section comprises a segmented top wall, a segmented bottom wall and side walls that define the cavity, wherein the upper slot is disposed between segments of the top wall and the lower slot is disposed between segments of the bottom wall. The base surface of the segmented bottom wall is substantially flat, and the upper surface of the segmented top wall is angled relative thereto. These features provide for single clutch nail pulling as well as double clutch nail pulling improved leverage.



According to one embodiment of the invention, the base surfaces of the nail pulling section and nail striking section are substantially flat and aligned in a common plane. The sides of the shank extend downward from the bridge section at a direction substantially orthogonal to this common plane to realize a T-square that can be used for orthogonal line marking.

According to another embodiment of the invention, the shank preferably includes at least one of the following: a set of through-holes that are disposed at predetermined offsets along the shank that can be used for parallel line marking; a set of visible indicia that define a ruler used for measurement and marking; a set of visual indicia that each extend along a face of the shank at a predetermined offset angle for angled line marking; and a slot through the shank for nail pulling.

It will be appreciated that such features enable the user to perform a variety of common measurement and marking operations, including accurate distance measurement, orthogonal line marking, parallel line marking, angled line marking, etc.

According to yet another embodiment of the present invention, the handle preferably includes an elongate section and a larger end section that extends at an angle relative to the elongate section. One side of the end section has a rib that ergonomically fits into the palm of the user's hand.

Additional objects and advantages of the invention will become apparent to those skilled in the art upon reference to the detailed description taken in conjunction with the provided figures.

## BRIEF DESCRIPTION OF THE DRAWINGS

FIG. **1** is a perspective view of a multipurpose hand tool in accordance with the present invention.

FIG. **2** is a side view of the multipurpose hand tool of FIG. **1**.

FIG. **3**A is a front view of the multipurpose hand tool of FIG. **1**.

FIG. **3**B is a cross-sectional view of the shank of the multipurpose hand tool of FIG. **1**.

FIG. **4** is a top view of the multipurpose hand tool of FIG. **1**.

FIG. **5** is a rear perspective view of the head member of the multipurpose hand tool of FIG. **1**.

FIG. **6** is a rear cross-sectional view of the head member of the multipurpose hand tool of FIG. **1**, showing the nail pulling section of the head member.

FIG. **7**A is a side view of an alternate embodiment of a multipurpose hand tool in accordance with the present invention.

FIGS. **7**B and **7**C are rear views of the multipurpose hand tool of FIG. **7**A, showing a side of the shank member.

FIG. **8** is a picture illustrating the operation of the multipurpose hand tool of FIG. **1** as a T-square.

FIG. **9** is a picture illustrating the operation of the multipurpose hand tool of FIG. **1** in marking a line parallel to the edge of a board.

FIG. **10** is a picture illustrating the operation of the multipurpose hand tool of FIG. **1** in marking a line oriented at an angle relative to the edge of a board.

FIG. **11** is a picture illustrating a single clutch nail pulling operation of the multipurpose hand tool of FIG. **1**.

FIG. **12** is a picture illustrating a double clutch nail pulling operation of the multipurpose hand tool of FIG. **1**, which affords the user with improved leverage over the single clutch nail pulling operation.

FIG. **13** is a picture illustrating a nail pulling operation using a through-slot in the shank member of the multipurpose hand tool of FIG. **1**.

FIG. **14** is a picture illustrating an exemplary ergonomic palm relief structure of the handle member of the multipurpose hand tool of FIG. **1**.

## DETAILED DESCRIPTION

Turning now to FIG. **1**, a multipurpose hammer **10** according to the present invention includes a head member **11**, a shank member **12**, and a handle member **13**. The head member **11** includes a rear section **14**, a bridge section **15**, and a nose section **16**. The rear section **14** is used for nail pulling, while the face **16**A of the nose **16** is used for striking nails into objects. The face **16**A may have a cross-hatched groove pattern (not shown) formed thereon.

As best shown in FIGS. **1**, **2**, **3**A, and **6**, the base **17** of the nose section **16** and the base **18** of the rear section **14** are substantially flat and aligned in a common plane. The shank member **12** projects down from the bridge section **15** of the head member **11**. The sides **19** and **20** of the shank member **12** extend downward from the bridge section **15** at a direction orthogonal to the common plane of the bases **17**,**18**. In this manner, the bases **17**, **18** of the head member **11** together with the sides **19**, **20** of the shank member **12** define a T-Square, which can be used to identify a line orthogonal to the edge of board and mark a line (or other indicia such as a point or cross) along this line. More particularly, the user places the bases **17**, **18** of the head member **11** against the edge of a board with the shank member **12** laying on the board as shown in FIG. **8**. The sides **19**, **20** of the shank member **12** identify a line orthogonal to the edge of the board. The user then marks a line (or makes a mark) along one side (or both sides) of the shank member **11**. This line (or mark) lies along a line orthogonal to the edge of the board.

As shown in FIGS. **1** and **2**, the face **21** of the shank member **12** includes a set of grooves **23** and/or other visible indicia such as the numbers 1, 2, . . . 7 (labeled **24**) that are spaced apart at regular intervals along the edges of the respective face of the shank member **12** to thereby define a ruler that can be used for measurement and marking. In the preferred embodiment, the numbers 1, 2, . . . 7 are spaced apart at 1 inch intervals, a set of longer grooves (or other visible indicia) are disposed along each face at ½ inch intervals starting from the base of the head/start of the shank, and a set of shorter grooves (or other visible indicia) disposed along each face at ¼ inch intervals between the longer grooves. Preferably, the grooves **23** and numbers **24** that define the shank ruler are also added to the opposite face **22** of the shank member **12** such that the tool is symmetrical for right-hand and left-hand use. Alternatively, the grooves **23** and numbers **24** that define the shank ruler may be included on only one of the faces **21**, **22** of the shank member **12**; or one face may include grooves and numbers indicating inches, while the other face may have grooves and numbers indicating centimeters.

The shank member **12** also includes a set of through-holes (for example, three shown as **25**A, **25**B, **25**C) that are positioned along the shank member **12** at predetermined distances relative to the bases **17**, **18** of the head member **11**. Such predetermined distances correspond to the common mark lengths, preferably including 1.5 inches, 3.5 inches, and 5.5 inches. Preferably, the holes **25**A, **25**B, **25**C have a diamond shape (FIGS. **1** and **2**). The holes **25**A, **25**B, **25**C can be used for marking lines on boards as follows. First, the user places the bases **17**, **18** of the head member **11** against the edge of a board with the shank member **12** lying on the board. A pencil (or other marker) is inserted into the desired hole (**25**A, **25**B, **25**C) such that its tip engages the board surface and is supported within the desired hole. In the preferred embodiment shown, the tip of the pencil/marker is inserted into the desired diamond-shaped hole such that it engages the board surface and is supported by one of the side corners of the diamond-shaped hole. The user then drags the tool **10** along the edge of the board, thereby causing the pencil/marker to create a marked line parallel to the edge of the board at an offset corresponding to the distance between the selected hole and the bases **17**, **18** of the head member **11** as shown in FIG. **9**.

The shank member **12** also includes a set of one or more angled grooves (for example, two shown as **26**A, **26**B) that extend along the face **21** of the shank member **12**. Preferably, such angled grooves are also added to the opposite face **22** of the shank member **12** such that the tool is symmetrical for right-hand and left-hand use. Alternatively, the angled grooves may be included on only one of the faces **21**, **22** of the shank member **12**. The angled grooves (**26**A, **26**B) are oriented at predetermined angles relative to the sides **19**, **20** of the shank member **12**. Such predetermined angles correspond to the common mark angles. In the exemplary embodiment as best shown in FIG. **2**, the groove **26**A is oriented at an angle of (90 degrees−22.5 degrees), or 67.5 degrees, relative to the side **19** of the shank member **12**, while the groove **26**B is oriented at an angle of (90 degrees−45 degrees), or 45 degrees, relative to the side **19** of the shank member **12**. Moreover, the angle grooves **26**A, **26**B project to a common point P that lies at intersection of the nose face **16**A and the nose base **17**. The groove **26**A is used for 22.5 degree angle marks while the groove **26**B is used for 45 degree angle marks as follows. First, the user lays the shank member **12** on a board and orients the tool **10** such that the point P and the desired angled groove (**26**A or **26**B) are aligned with the edge of the board. In this configuration, each side (**19**, **20**) of the shank member **12** defines a line that is offset at an angle relative to the edge of the board. The offset angle of this line corresponds to the offset angle (22.5 degrees or 45 degrees) of the selected angle groove (**26**A or **26**B). The user then marks a line (or makes a mark) along a side of the shank member **12** such that the scribed line/mark it is oriented at the desired angle as shown in FIG. **10**.

In an alternate embodiment shown in FIGS. **7**A and **7**B, the side **20** of the shank member **12** includes a set of grooves **27** and/or other visible indicia that are spaced apart at regular intervals along the length of the side **20** of the shank member **12**. The grooves **27** define lines (not shown) that project from the respective grooves to the common intersection point P as shown in FIG. **7**A. These lines are oriented at predetermined angles relative to the sides **19**, **20** of the shank member **12**. Such predetermined angles correspond to the different mark angles. In the preferred embodiment shown in FIGS. **7**A and **7**B, a set of twelve grooves **27** are spaced apart every ¼ inch from the base of the head/start of the shank. The twelve grooves are offset laterally from the intersection point P by 3 inches. In this configuration, the line that projects from the sixth groove to the point P (which is marked by the groove **26**A) corresponds to an angle of 22.5 degrees, while the line that projects from the twelfth groove (i.e., at 3 inches) to the point P (which is marked by the groove **26**B) corresponds to an angle of 45 degrees. The lines that project from the other grooves to the point P correspond to different mark angles. The grooves or other visible indicia **27** are used for angle marking as follows. First, the user lays the shank member **12** on a board and orients the tool **10** such that the point P and the line projecting from the desired groove to the point P are aligned with the edge of the board. In this configuration, each

side (**19**, **20**) of the shank member **12** defines a line that is offset at an angle relative to the edge of the board. The offset angle of this line corresponds to the angle of the line projecting from the desired groove to the point P. The user then marks a line (or other visible indicia) along a side of the shank member **12** such that the scribed line/mark is oriented at the desired angle in a manner similar to that shown in FIG. **10**.

As shown in FIG. **7**C, the sides **19** and **20** of the shank member **12** are concave in an elliptical fashion. This arched edge in tandem with the concave faces **21**, **22** (FIG. **3**B) create an extremely accurate marking shank when used with framing material. Preferably, the top 2.25 inches of the sides **19** and **20** have a radius of curvature of approximately 4 feet, and the remainder of the sides **19** and **20** have a radius of curvature of 10 feet as shown. Preferably, the width of the sides **19** and **20** at the junction of the shank member **12** and the base **18** of the head member **11** is approximately 0.375 inches, the width of the sides **19** and **20** at the junction of the shank member **11** and the handle member **13** is approximately 0.625 inches, and the width of the sides **19** and **20** at an offset of 2.25 inches from the junction of the shank member **12** and the base **18** of the head member **11** is approximately 0.25 inches as shown.

As best shown in FIGS. **4**, **5** and **6**, the rear section **14** of the head member **11** includes two top wall segments **31**A, **31**B, two side walls **32**A, **32**B and two bottom wall segments **33**A, **33**B that define two tapered claw members extending rearward with a central opening **34** therebetween. The central opening **34** is accessible from the rear of the head member **11**. The upper surface of the top wall segments **31**A, **31**B are angled (FIG. **2**), preferably, at an angle relative to the base **18** between 22 degrees and 28 degrees, and most preferably at an angle relative to the base **18** of 24 degrees. A first slot **35** defined by the top wall segments **31**A, **31**B leads to the central opening **34** from above. The exterior surface or base **18** of the bottom wall **33** is substantially flat and perpendicular to the shank member **12** for marking as described above. A second slot **36** defined by the bottom wall segments **33**A, **33**B leads to the central opening **34** from below. The second slot **36** is aligned with the first slot **25** such that the two slots **35**, **36** can receive the elongate body of the nail. The top wall segments **31**A, **31**B include respective ledges **37**A, **37**B that are disposed along the central opening **34** adjacent the first slot **35**.

For single clutch nail pulling, the head of the nail is disposed within the central opening **34** with the elongate body of the nail passing through the first slot **35**. The ledges **37**A, **37**B interface to the nail head for removal of the nail as shown in FIG. **11**.

For double clutch pulling, which is typically performed after single clutch pulling and provides improved leverage over single clutch pulling, the head of the nail is disposed adjacent the base **18** of the bottom wall **33** with the elongate body of the nail passing through both the first and second slots **35**, **36**. The base **18** of the bottom wall **33** interfaces to the nail head for removal of the nail as best shown in FIG. **12**. The base **18** can also be used for nail pulling in the event that there is sufficient clearance to between the nail head and the object, for example, where the nail has been partially hammered out of a board or where the nail is bent during hammering.

As best shown in FIG. **2**, the top wall **31** preferably extends rearward beyond the bottom wall **33** with the ends of the sidewalls **32** therebetween curved to accommodate this structure. This design allows the user to efficiently and effectively insert nail heads into the central opening **34** for single clutch pulling as described above.

As best shown in FIG. **3**B, the shank member **12** is crowned (or concave) on both of its faces **21**, **22** in order to provide improved accuracy and a solid fit (e.g., reduced rocking motion) when using the tool on crowned and splintered wood.

As best shown in FIG. **2**, the shank member **12** also preferably includes a slot **41** through the shank member **12** that receives the elongate body of a nail for pulling the nail as shown in FIG. **13**. The slot **41** is preferably disposed 2⅝ inches from the top of the head member **11** of the tool. This location provides optimal fulcrum point for pulling **16**D nails (the most commonly used nails for carpentry applications).

Preferably, the width of faces **21**, **22** of the shank member is on the order of 1⅜ inches or 1 7/16 inches. These widths correspond to the width of a stud (2×4 or 2×6) plus the pencil width. Whenever a 90 degree intersection is needed (on wall plates for example), the layout or position for both sides can be easily marked without movement of the tool **10**. This feature improves stud placement accuracy.

As shown in FIG. **2**, the shank member **12** may also include additional through-holes (for example two shown as **43**A, **43**B). The through-holes **43**A, **43**B are preferably disposed adjacent corresponding angled grooves **26**A, **26**B as shown and have an annular shape with a smaller diameter (e.g., on the order of ⅛$^{th}$ inch). A nail (e.g., an 8D nail for a ⅛$^{th}$ inch hole) is dropped into the hole. The nail acts as a stop against the object for angle marking as described herein and best shown in FIG. **10**.

The head member **11** and shank member **12** are preferably realized from steel, with the handle member **13** preferably realized from a wooden or composite material that is affixed to the shank member **12**. As best shown in FIG. **2**, the handle member **13** is preferably ergonomically designed with an elongate section **45** and a larger angled end section **47**. The rear side **49** of the end section **47** has a rib **51** as best shown in FIG. **14**. This rib **51** is adapted to fit in the hip of the palm of the hand in use. The angle between the elongate section **45** and the larger end section **47** is preferably between 5 and 20 degrees, which allows the hand to grip the handle in its most natural positions (with a straight wrist). The end section **47** also has an angled surface **52** extending from an end surface **53** that is oriented parallel to the bases **17**, **18** of the head member **11** preferably at a distance of 16 inches. The end surface **53** is used for line marking in a manner similar to that described above with respect to FIG. **8**. The angled surface **52** provide for ease of use when sliding the tool **10** into a bag. It also affords an improved ergonomic fit to the hand when holding the tool low.

There have been described and illustrated herein several embodiments of a multipurpose hand tool and corresponding methods of use. While particular embodiments of the invention have been described, it is not intended that the invention be limited thereto, as it is intended that the invention be as broad in scope as the art will allow and that the specification be read likewise. Thus, while particular visual indicia (such as grooves) have been disclosed, it will be appreciated that other visual indicia such as printed lines, engraved lines, raised ridges or other suitable visual indicia can be used as well. In addition, while a number of particular features have been disclosed, it will be understood that such features can be used alone, in combination with a subset of the features described herein, or in combination with other hand tool devices. Moreover, while particular configurations have been disclosed, it will be appreciated that other configurations could be used as well. It will therefore be appreciated by those skilled in the art that yet other modifications could be made to the provided invention without deviating from its spirit and scope as claimed.

What is claimed is:

1. A multipurpose hand tool comprising:

a head comprising a nail-pulling section, a bridge section and a nail-striking section;

a handle; and

a shank extending from the bridge section of the head to the handle, the shank having a generally rectangular cross-section with opposed major faces and minor sidewalls extending therebetween;

wherein the nail-pulling section defines two tapered claw members extending rearward with a cavity therebetween, the cavity accessible from the rear with an upper and lower slot leading thereto, the cavity for receiving a nail head therein with the upper and lower slots for receiving an elongate nail body therein;

wherein the nail pulling section and nail striking section of the head include base surfaces that are substantially flat and aligned in a common plane; and

wherein the shank extends generally downward from the bridge section of the head at a direction substantially orthogonal to the common plane of said base surfaces.

2. A multipurpose hand tool according to claim 1, wherein:

the nail pulling section comprises a segmented top wall, a segmented bottom wall, and side walls that define said tapered claw members and said cavity, wherein the upper slot is realized in said top wall and the lower slot is realized in said bottom wall.

3. A multipurpose hand tool according to claim 2, wherein:

the segmented bottom wall has a base surface that is substantially flat and the segment top wall has an upper surface that is oriented relative to the base surface at an angle between 22 degrees and 28 degrees.

4. A multipurpose hand tool according to claim 1, wherein:

said top wall defines a ledge adjacent said upper slot, wherein the ledge is adapted to interface to a nail head disposed within the cavity for nail pulling.

5. A multipurpose hand tool according to claim 1, wherein:

the sidewalls of the shank extend downward from the bridge section of the head at a direction substantially orthogonal to the common plane of said base surfaces.

6. A multipurpose hand tool according to claim 5, wherein:

the shank includes opposing faces that are crowned (or concave).

7. A multipurpose hand tool according to claim 5, wherein:

the shank has a width selected from 1⅜ inches and 1 7/16 inches.

8. A multipurpose hand tool according to claim 1, wherein:

the shank includes a set of holes though the opposed faces of the shank that are disposed at predetermined offsets along the shank relative to said base surfaces.

9. A multipurpose hand tool according to claim 8, wherein:

said predetermined offsets correspond to common mark lengths including 1.5 inches, 3.5 inches, and 5.5 inches.

10. A multipurpose hand tool according to claim 1, wherein:

the shank includes a set of visible indicia that are spaced apart at regular intervals along the shank to thereby define a ruler that can be used for measurement and marking.

11. A multipurpose hand tool according to claim 10, wherein:

said set of visual indicia comprises grooves disposed along edges of at least one face of the shank as well as numbers disposed along the at least one face of the shank.

12. A multipurpose hand tool according to claim 1, wherein:

the shank includes a set of visual indicia that extend along at least one face of the shank at predetermined offset angles relative to the sidewalls of the shank.

13. A multipurpose hand tool according to claim 12, wherein:

said predetermined offset angles correspond to common mark angles including 22.5 degrees and 45 degrees.

14. A multipurpose hand tool according to claim 12, wherein:

said set of visual indicia comprise grooves that are oriented at predetermined angles relative to the sides of the shank.

15. A multipurpose hand tool according to claim 1, wherein:

the shank includes a slot through the opposed faces of the shank that receives the elongate body of a nail for pulling the nail.

16. A multipurpose hand tool according to claim 15, wherein:

said slot is disposed 2⅝ inches from the top of the head.

17. A multipurpose hand tool according to claim 1, wherein:

the handle includes an elongate section and a larger end section that extends at an angle relative to the elongate section, wherein one side of the larger end section has a rib adapted to fit in the hip of the palm of the hand in use.

18. A multipurpose hand tool according to claim 17, wherein:

the angle between the elongate section and the larger end section is between 5 and 20 degrees.

19. A multipurpose hand tool according to claim 17, wherein:

the head includes co-planar base surfaces, and the larger end section has a surface that is oriented parallel to said base surfaces for line marking.

20. A multipurpose hand tool according to claim 19, wherein:

the surface is offset from said base surfaces at a distance of 16 inches.

21. A multipurpose hand tool comprising:

a head comprising a nail-pulling section that defines two tapered claw members extending rearward from a bridge section and a nail-striking section disposed forward of the bridge section;

a handle; and

a shank extending from the bridge section of the head to the handle, the shank having a generally rectangular cross-section with opposed major faces and minor sidewalls extending therebetween, said opposed major faces defining a set of diamond shaped holes therethrough that include opposed corners pointing to said sidewalls;

wherein the nail pulling section and nail striking section include base surfaces that are substantially flat and aligned in a common plane, and the shank extends generally downward from the bridge section of the head in a direction substantially orthogonal to the common plane of said base surfaces; and

wherein said holes are disposed at predetermined offsets along said shank relative to said base surfaces, said predetermined offsets corresponding to common mark lengths selected from the group consisting of 1.5 inches, 3.5 inches, and 5.5 inches.

22. A multipurpose hand tool according to claim 21, wherein:

the shank includes a set of visible indicia that are spaced apart at regular intervals along the shank to thereby define a ruler that can be used for measurement and marking.

**23**. A multipurpose hand tool according to claim **22**, wherein:

said set of visual indicia comprises grooves disposed along edges of at least one face of the shank as well as numbers disposed along the at least one face of the shank.

**24**. A multipurpose hand tool according to claim **21**, wherein:

the shank includes a set of visual indicia that extend along at least one face of the shank at predetermined offset angles relative to the sidewalls of the shank.

**25**. A multipurpose hand tool according to claim **24**, wherein:

said predetermined offset angles correspond to common mark angles including 22.5 degrees and 45 degrees.

**26**. A multipurpose hand tool according to claim **25**, wherein:

said set of visual indicia comprise grooves that are oriented at predetermined angles relative to the sides of the shank.

**27**. A multipurpose hand tool according to claim **21**, wherein:

the shank includes opposing faces that are crowned (or concave).

**28**. A multipurpose hand tool according to claim **21**, wherein:

the shank includes a slot through the opposed faces of the shank that receives the elongate body of a nail for pulling the nail.

**29**. A multipurpose hand tool according to claim **28**, wherein:

said slot is disposed 2⅝ inches from the top of the head.

**30**. A multipurpose hand tool according to claim **21**, wherein:

the shank has a width selected from 1⅜ inches and 1 7/16 inches.

**31**. A multipurpose hand tool comprising:

a head comprising a nail-pulling section that defines two tapered claw members extending rearward from a bridge section and a nail-striking section disposed forward of the bridge section, wherein the nail-pulling section defines two tapered claw members extending rearward with a cavity therebetween, the cavity accessible from the rear with an upper and lower slot leading thereto, the cavity for receiving a nail head therein with the upper and lower slots for receiving an elongate nail body therein;

a handle; and

a shank extending from the bridge section of the head to the handle, the shank having a generally rectangular cross-section with opposed major faces and minor sidewalls extending therebetween, said opposed major faces defining a set of diamond shaped holes therethrough that include opposed corners pointing to said sidewalls;

wherein the nail pulling section and nail striking section include base surfaces that are substantially flat and aligned in a common plane, and the shank extends generally downward from the bridge section of the head in a direction substantially orthogonal to the common plane of said base surfaces; and

wherein said holes are disposed at predetermined offsets along said shank relative to said base surfaces, said predetermined offsets corresponding to common mark lengths selected from the group consisting of 1.5 inches, 3.5 inches, and 5.5 inches.

* * * * *